# Memory-Mapped Files

- generic interface:

  `vaddr ← mmap(file descriptor,fileoffset,length)`
  `munmap(vaddr,length)`

- `mmap` call returns the virtual address to which the file is mapped
- `munmap` call unmaps mapped files within the specified virtual address range

Memory-mapping is an alternative to the read/write file interface.

# Memory Mapping Illustration

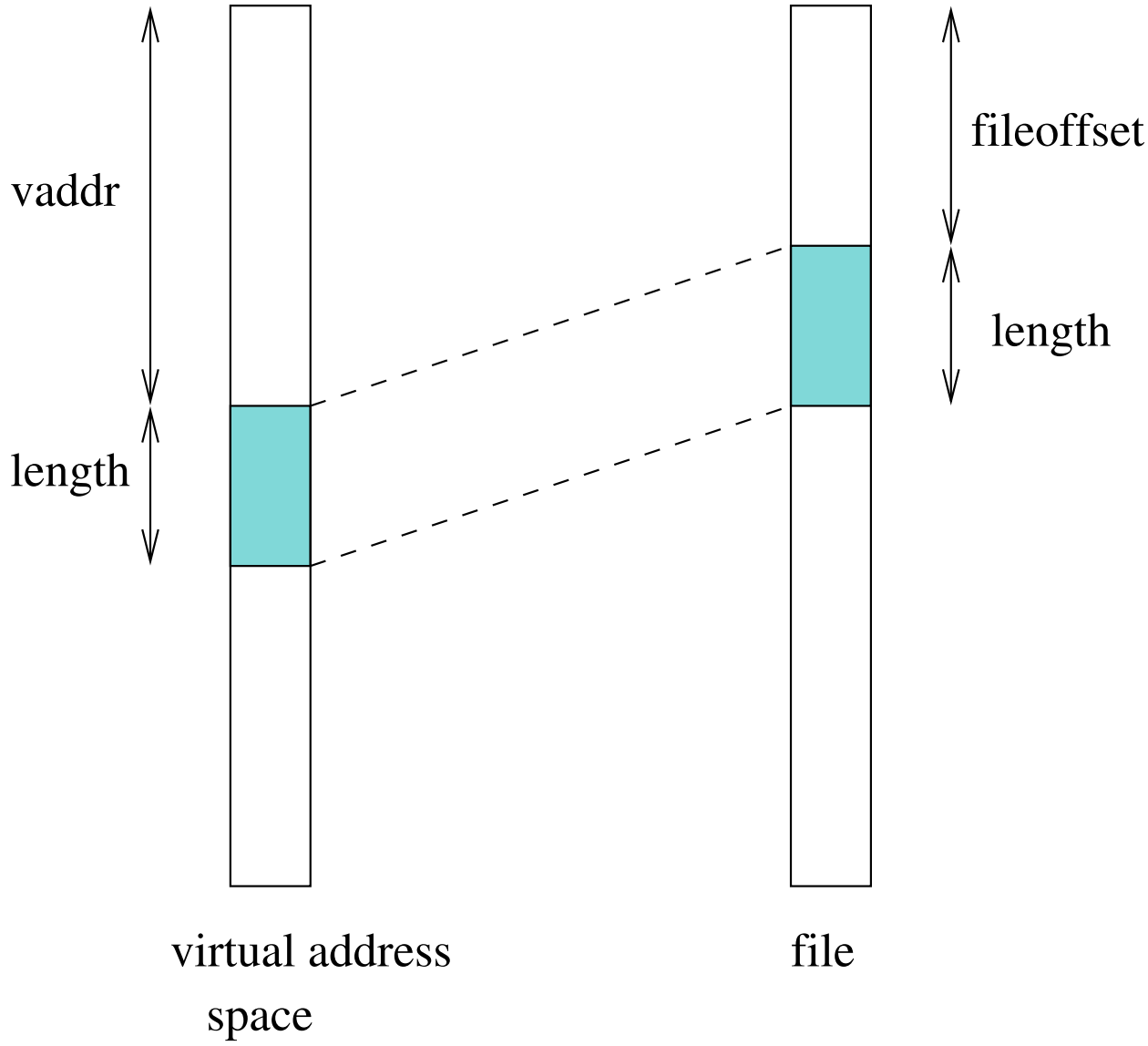

# Memory Mapping Update Semantics

- what should happen if the virtual memory to which a file has been mapped is updated?
- some options:
  - prohibit updates (read-only mapping)
  - eager propagation of the update to the file (too slow!)
  - lazy propagation of the update to the file
    - user may be able to request propagation (e.g., Posix `msync()`
    - propagation may be guaranteed by `munmap()`
  - allow updates, but do not propagate them to the file

# Memory Mapping Concurrency Semantics

- what should happen if a memory mapped file is updated?
  - by a process that has mmapped the same file
  - by a process that is updating the file using a `write()` system call
- options are similar to those on the previous slide. Typically:
  - propagate lazily: processes that have mapped the file *may* eventually see the changes
  - propagate eagerly: other processes will see the changes
    - typically implemented by invalidating other process's page table entries

# Interprocess Communication Mechanisms

- shared storage
  - These mechanisms have already been covered. examples:
    - shared virtual memory
    - shared files
  - processes must agree on a name (e.g., a file name, or a shared virtual memory key) in order to establish communication
- message based
  - signals
  - sockets
  - pipes
  - . . .

# Signals

- signals permit asynchronous one-way communication
  - from a process to another process, or to a group of processes
  - from the kernel to a process, or to a group of processes
- there are many types of signals
- the arrival of a signal causes the execution of a *signal handler* in the receiving process
- there may be a different handler for each type of signal

# Examples of Signal Types

| Signal | Value | Action | Comment |
|---|---|---|---|
| SIGINT | 2 | Term | Interrupt from keyboard |
| SIGILL | 4 | Core | Illegal Instruction |
| SIGKILL | 9 | Term | Kill signal |
| SIGCHLD | 20,17,18 | Ign | Child stopped or terminated |
| SIGBUS | 10,7,10 | Core | Bus error |
| SIGXCPU | 24,24,30 | Core | CPU time limit exceeded |
| SIGSTOP | 17,19,23 | Stop | Stop process |

# Signal Handling

- operating system determined default signal handling for each new process
- example default actions:
  - ignore (do nothing)
  - kill (terminate the process)
  - stop (block the process)
- running processes can change the default for some or all types of signals
- signal-related system calls
  - calls to set non-default signal handlers, e.g., Unix `signal`, `sigaction`
  - calls to send signals, e.g., Unix `kill`

# Message Passing

Indirect Message Passing

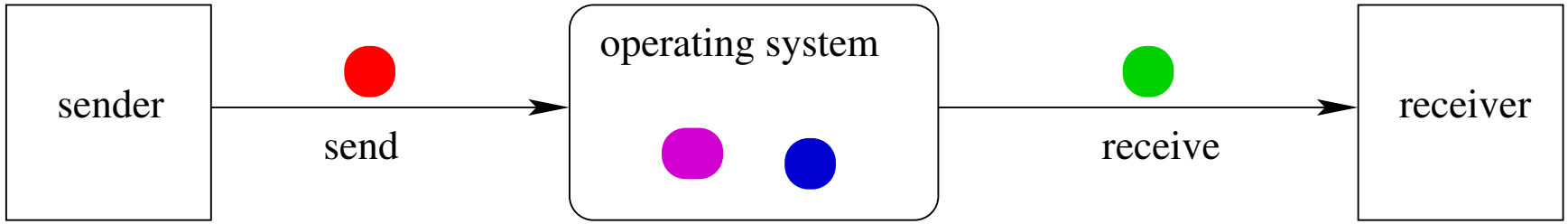


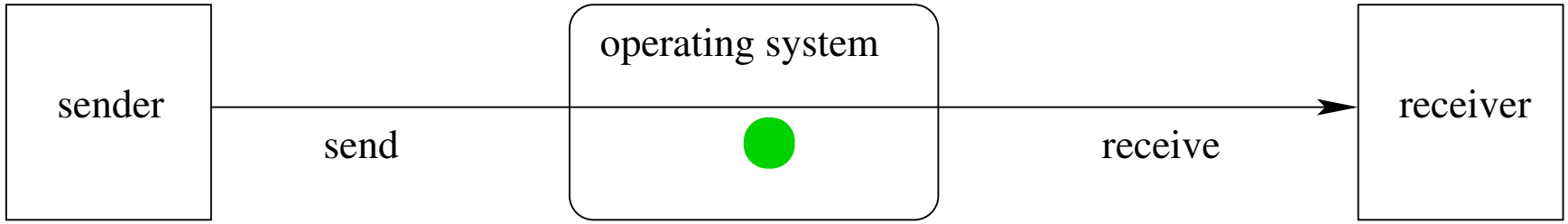


Direct Message Passing

If message passing is indirect, the message passing system must have some capacity to buffer (store) messages.

# Properties of Message Passing Mechanisms

**Addressing:** how to identify where a message should go

**Directionality:**

- simplex (one-way)
- duplex (two-way)
- half-duplex (two-way, but only one way at a time)

**Message Boundaries:**

**datagram model:** message boundaries

**stream model:** no boundaries

## Properties of Message Passing Mechanisms (cont'd)

**Connections:** need to connect before communicating?

- in connection-oriented models, recipient is specified at time of connection, not by individual send operations. All messages sent over a connection have the same recipient.
- in connectionless models, recipient is specified as a parameter to each send operation.

**Reliability:**

- can messages get lost?
- can messages get reordered?
- can messages get damaged?

# Sockets

- a socket is a communication *end-points*
- if two processes are to communicate, each process must create its own socket
- two common types of sockets

  **stream sockets:** support connection-oriented, reliable, duplex communication under the stream model (no message boundaries)

  **datagram sockets:** support connectionless, best-effort (unreliable), duplex communication under the datagram model (message boundaries)

- both types of sockets also support a variety of address domains, e.g.,

  **Unix domain:** useful for communication between processes running on the same machine

  **INET domain:** useful for communication between process running on different machines that can communicate using the TCP/IP protocols.

## Using Datagram Sockets (Receiver)

```
s = socket(addressType, SOCK_DGRAM);
bind(s,address)
recvfrom(s,buf,bufLength,sourceAddress);
...
close(s);
```

- `socket` creates a socket
- `bind` assigns an address to the socket
- `recvfrom` receives a message from the socket
  - `buf` is a buffer to hold the incoming message
  - `sourceAddress` is a buffer to hold the address of the message sender
- both `buf` and `sourceAddress` are filled by the `recvfrom` call

# Using Datagram Sockets (Sender)

```
s = socket(addressType, SOCK_DGRAM);
sendto(s,buf,msgLength,targetAddress)
...
close(s);
```

- `socket` creates a socket
- `sendto` send a message using the socket
  - `buf` is a buffer that contains the message to be sent
  - `msgLength` indicates the length of the message in the buffer
  - `targetAddress` is the address of the socket to which the message is to be delivered

# More on Datagram Sockets

- `sendto` and `recvfrom` calls *may* block
  - `recvfrom` blocks if there are no messages to be received from the specified socket
  - `sendto` blocks if the system has no more room to buffer undelivered messages
- datagram socket communications are (in general) unreliable
  - messages (datagrams) may be lost
  - messages may be reordered
- The sending process must know the address of the receive process's socket. How does it know this?

# A Socket Address Convention

```
Service          Port       Description
-------------------------------------------------------
echo             7/udp
systat           11/tcp
netstat          15/tcp
chargen          19/udp
ftp              21/tcp
ssh              22/tcp     # SSH Remote Login Protocol
telnet           23/tcp
smtp             25/tcp
time             37/udp
gopher           70/tcp     # Internet Gopher
finger           79/tcp
www              80/tcp     # WorldWideWeb HTTP
pop2             109/tcp    # POP version 2
imap2            143/tcp    # IMAP
```

## Using Stream Sockets (Passive Process)

```
s = socket(addressType, SOCK_STREAM);
bind(s,address);
listen(s,backlog);
ns = accept(s,sourceAddress);
recv(ns,buf,bufLength);
send(ns,buf,bufLength);
...
close(ns); // close accepted connection
close(s);  // don't accept more connections
```

- `listen` specifies the number of connection requests for this socket that will be queued by the kernel
- `accept` accepts a connection request and creates a new socket (`ns`)
- `recv` receives up to `bufLength` bytes of data from the connection
- `send` sends `bufLength` bytes of data over the connection.

## Notes on Using Stream Sockets (Passive Process)

- `accept` creates a new socket (`ns`) for the new connection
- `sourceAddress` is an address buffer. `accept` fills it with the address of the socket that has made the connection request
- additional connection requests can be accepted using more `accept` calls on the original socket (`s`)
- `accept` blocks if there are no pending connection requests
- connection is duplex (both `send` and `recv` can be used

## Using Stream Sockets (Active Process)

```
s = socket(addressType, SOCK_STREAM);
connect(s,targetAddress);
send(s,buf,bufLength);
recv(s,buf,bufLength);
...
close(s);
```

- `connect` requests a connection request to the socket with the specified address
  - `connect` blocks until the connection request has been accepted
- active process may (optionally) bind an address to the socket (using `bind`) before connecting. This is the address that will be returned by the `accept` call in the passive process
- if the active process does not choose an address, the system will choose one

# Illustration of Stream Socket Connections

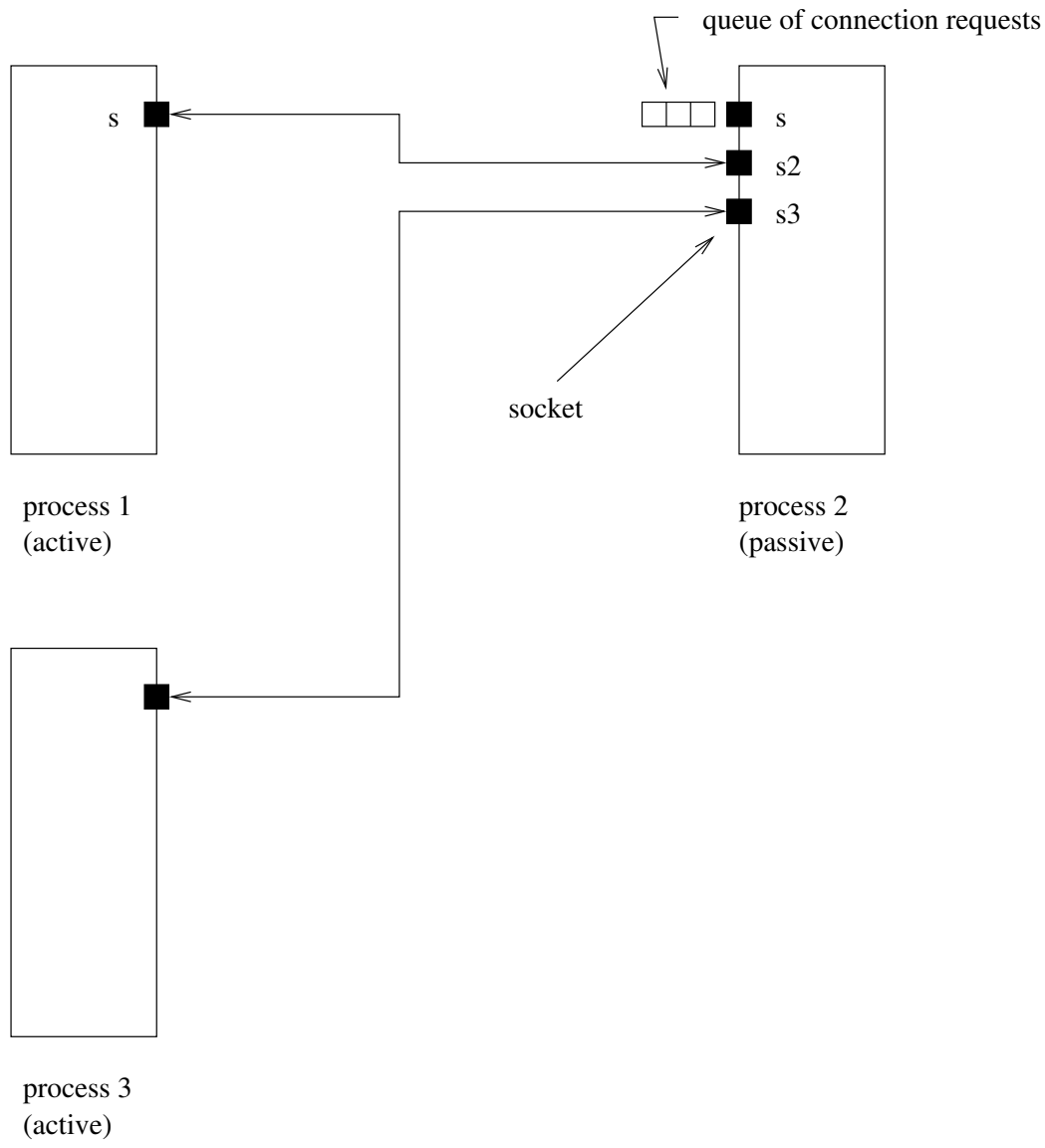

# Pipes

- pipes are communications objects (not end-points)
- pipes use the stream model and are connection-oriented and reliable
- some pipes are simplex, some are duplex
- pipes use an implicit addressing mechanism that limits their use to communication between *related* processes, typically a child process and its parent
- a `pipe()` system call creates a pipe and returns two descriptors, one for each end of the pipe
  - for a simplex pipe, one descriptor is for reading, the other is for writing
  - for a duplex pipe, both descriptors can be used for reading and writing

## One-way Child/Parent Communication Using a Simplex Pipe

```
int fd[2];
char m[] = ``message for parent'';
char y[100];
pipe(fd); // create pipe
pid = fork(); // create child process
if (pid == 0) {
  // child executes this
  close(fd[0]); // close read end of pipe
  write(fd[1],m,19);
  ...
} else {
  // parent executes this
  close(fd[1]); // close write end of pipe
  read(fd[0],y,100);
  ...
}
```

# Illustration of Example (after `pipe()`)

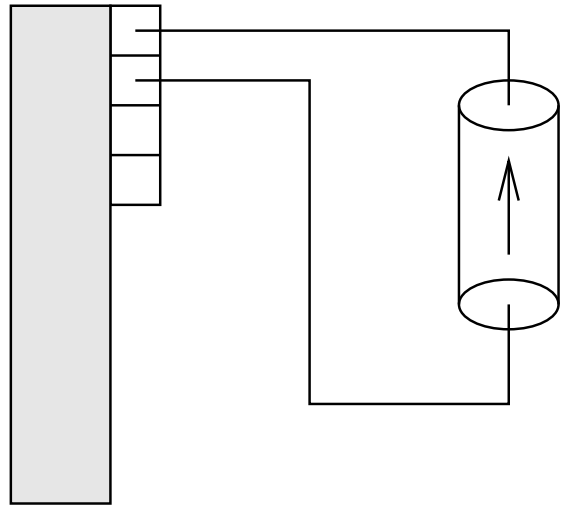

parent process

# Illustration of Example (after `fork()`)

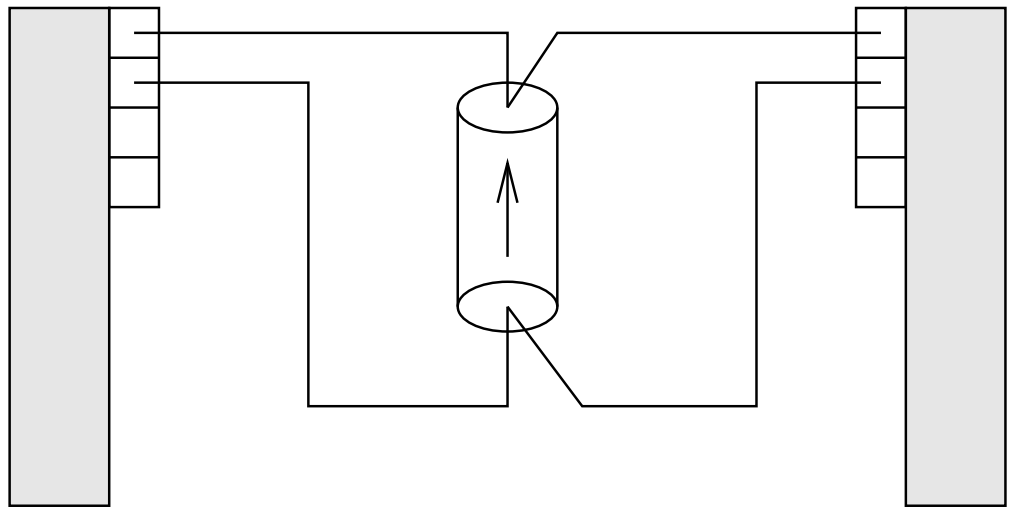

parent process child process

# Illustration of Example (after `close()`)

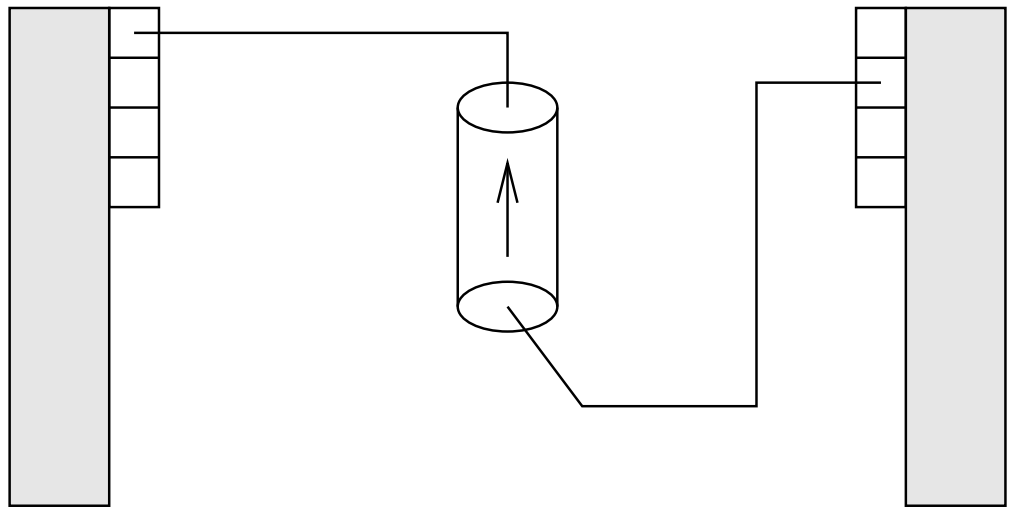

parent process child process

# Examples of Other Interprocess Communication Mechanisms

**named pipe:**

- similar to pipes, but with an associated name (usually a file name)
- name allows arbitrary processes to communicate by opening the same named pipe
- must be explicitly deleted, unlike an unnamed pipe

**message queue:**

- like a named pipe, except that there are message boundaries
- `msgsend` call sends a message into the queue, `msgrecv` call receives the next message from the queue

# Implementing IPC

- application processes use descriptors (identifiers) provided by the kernel to refer to specific sockets and pipe, as well as files and other objects
- kernel *descriptor tables* (or other similar mechanism) are used to associate descriptors with kernel data structures that implement IPC objects
- kernel provides bounded buffer space for data that has been sent using an IPC mechanism, but that has not yet been received
  - for IPC objects, like pipes, buffering is usually on a per object basis
  - IPC end points, like sockets, buffering is associated with each endpoint

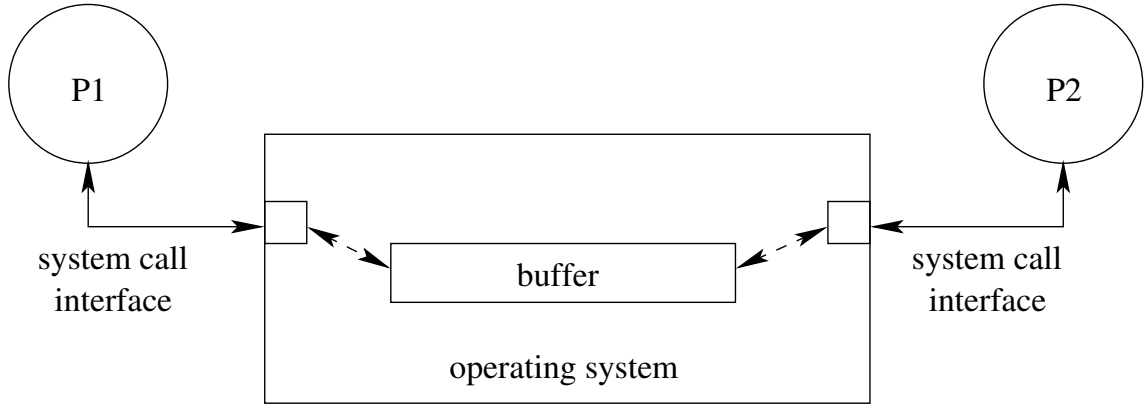

# Network Interprocess Communication

- some sockets can be used to connect processes that are running on different machine
- the kernel:
  - controls access to network interfaces
  - multiplexes socket connections across the network

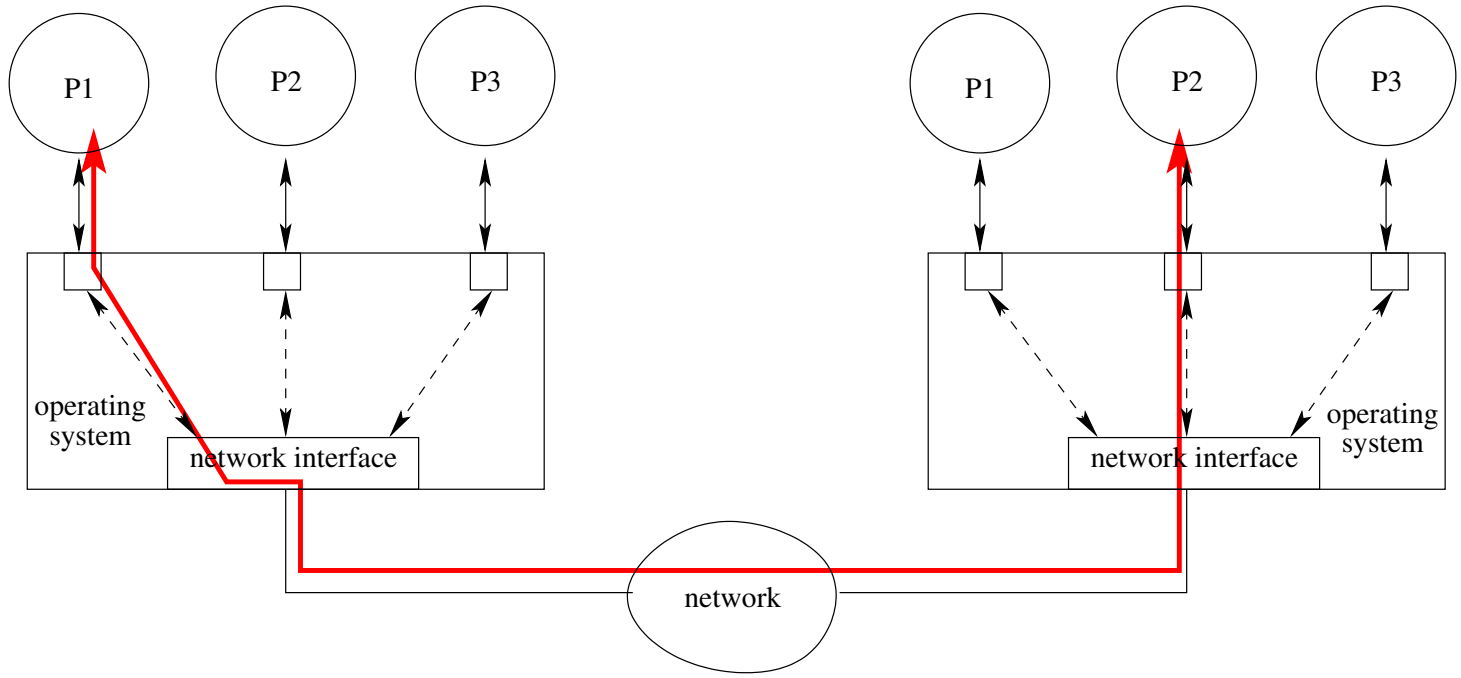

# Networking Reference Models

- ISO/OSI Reference Model

| | |
|---|---|
| 7 | Application Layer |
| 6 | Presentation Layer |
| 5 | Session Layer |
| 4 | Transport Layer |
| 3 | Network Layer |
| 2 | Data Link Layer |
| 1 | Physical Layer |

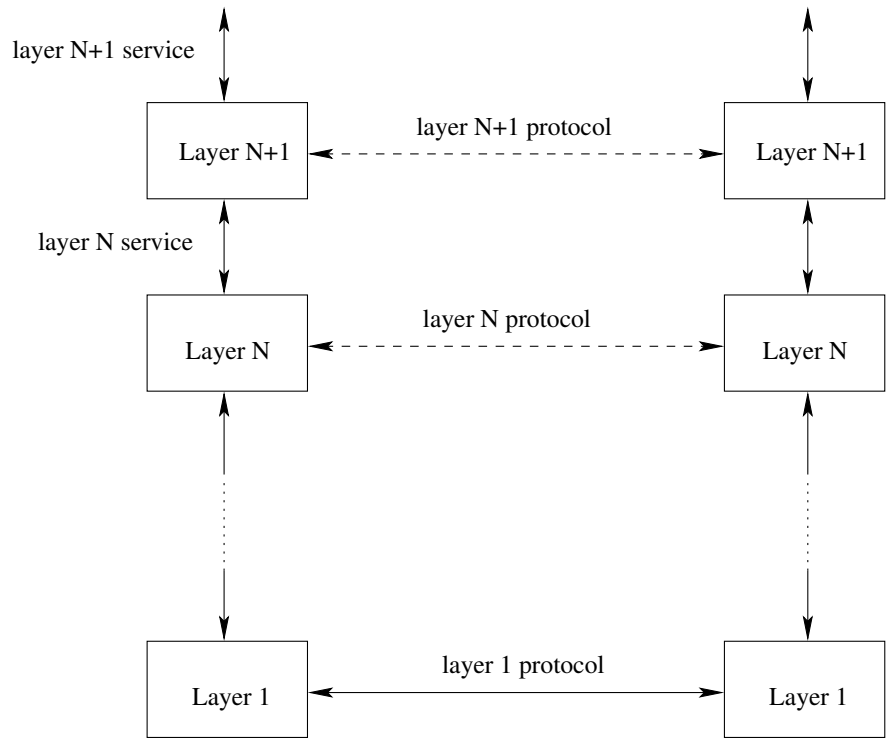


- Internet Model
  - layers 1-4 and 7

# Internet Protocol (IP): Layer 3

- every machine has one (or more) IP addresses, in addition to its data link layer address(es)
- In IPv4, addresses are 32 bits, and are commonly written using "dot" notation, e.g.:
  - cpu06.student.cs = 129.97.152.106
  - www.google.ca = 216.239.37.99
- IP moves packets (datagrams) from one machine to another machine
- principal function of IP is *routing*: determining the network path that a packet should take to reach its destination
- IP packet delivery is "best effort" (unreliable)

# IP Routing Table Example

- Routing table for zonker.uwaterloo.ca, which is on three networks, and has IP addresses 129.97.74.66, 172.16.162.1, and 192.168.148.1 (one per network).

| Destination | Gateway | Interface |
|---|---|---|
| 172.16.162.* | - | vmnet1 |
| 129.97.74.* | - | eth0 |
| 192.168.148.* | - | vmnet8 |
| default | 129.97.74.1 | eth0 |

- routing table key:

  **destination:** ultimate destination of packet

  **gateway:** next hop towards destination (or "-" if destination is directly reachable)

  **interface:** which network interface to use to send this packet

# Internet Transport Protocols

**TCP:** transport control protocol

- connection-oriented
- reliable
- stream
- congestion control
- used to implement INET domain stream sockets

**UDP:** user datagram protocol

- connectionless
- unreliable
- datagram
- no congestion control
- used to implement INET domain datagram sockets

# TCP and UDP Ports

- since there can be many TCP or UDP communications end points (sockets) on a single machine, there must be a way to distinguish among them
- each TCP or UDP address can be thought of as having two parts:

  (machine name, port number)

- The machine name is the IP address of a machine, and the port number serves to distinguish among the end points on that machine.
- INET domain socket addresses are TCP or UDP addresses (depending on whether the socket is a stream socket or a datagram socket).

# Example of Network Layers

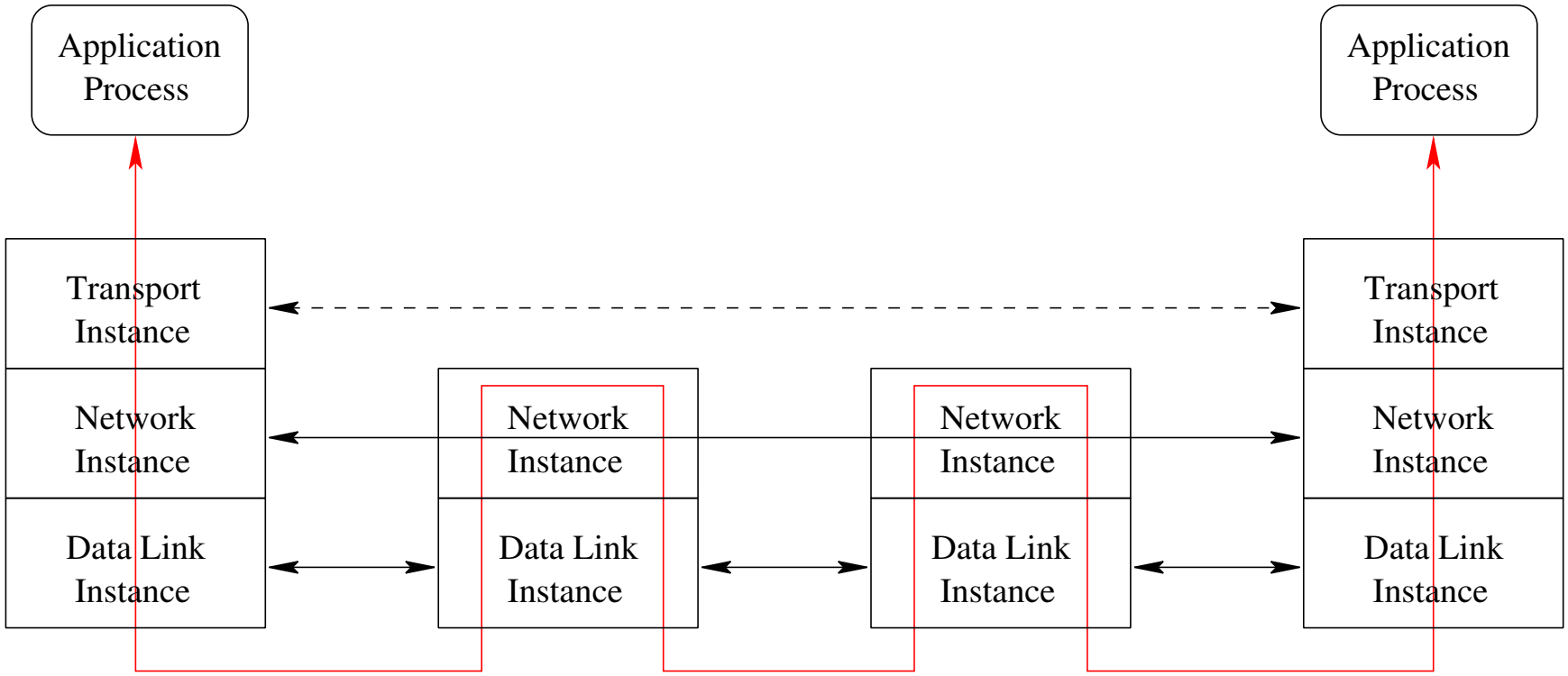


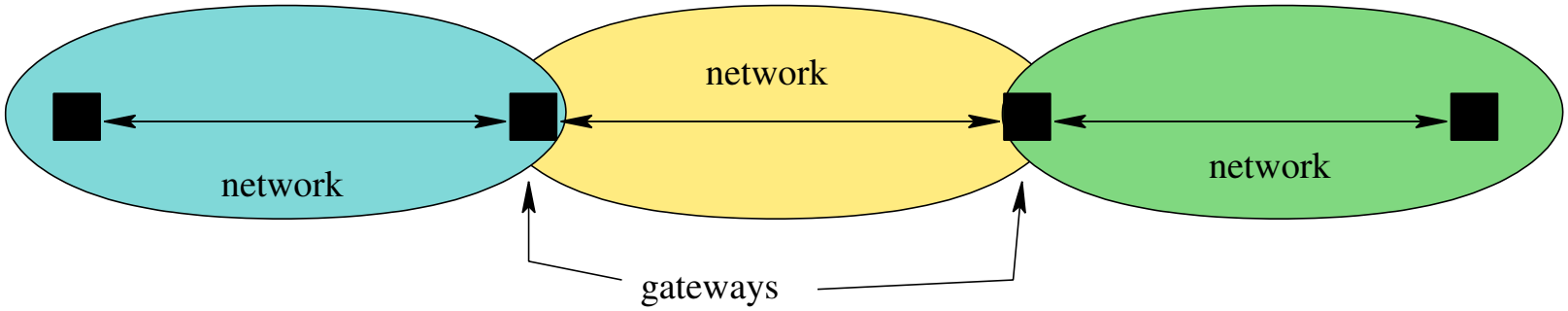

# Network Packets (UDP Example)

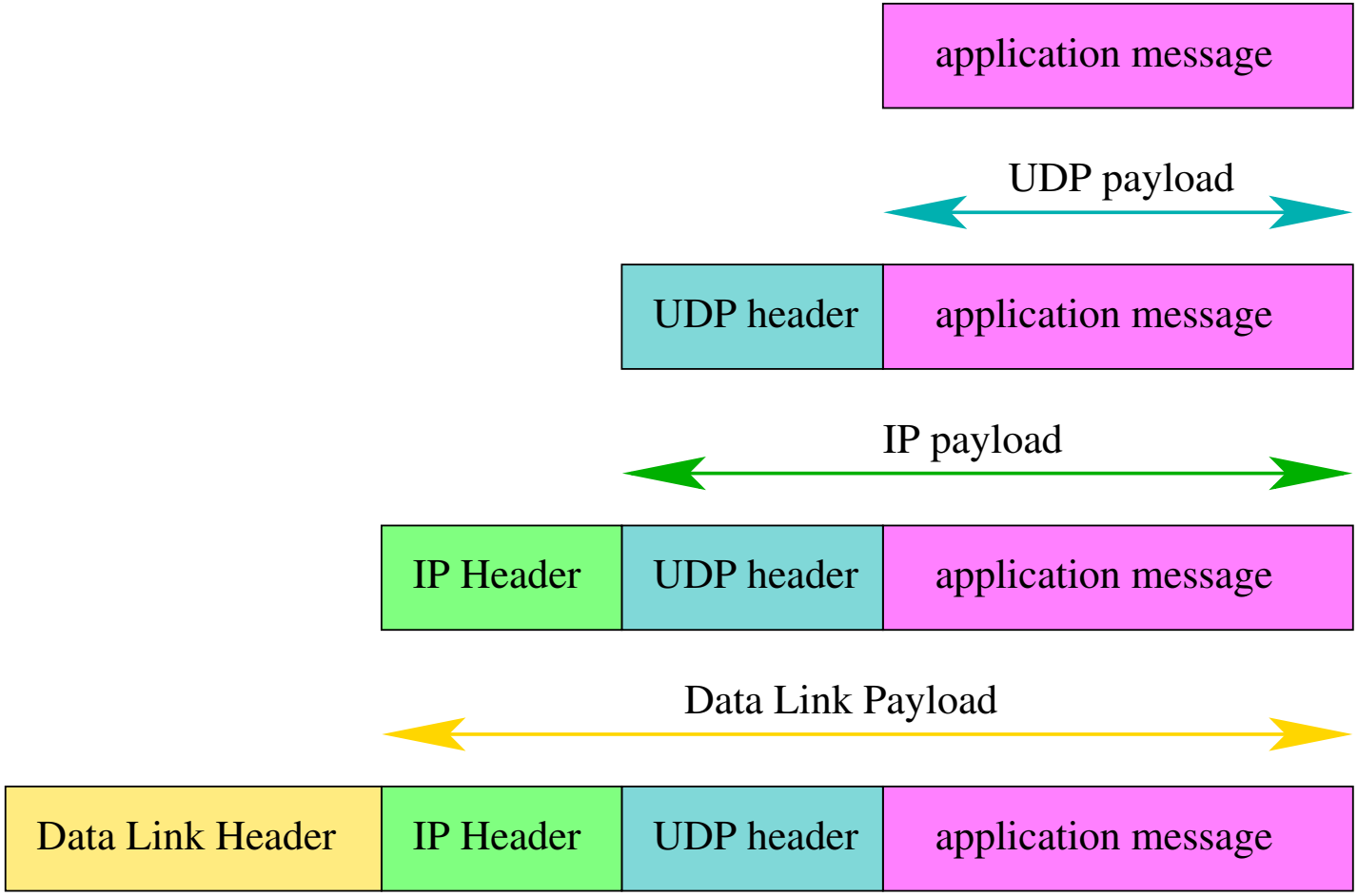
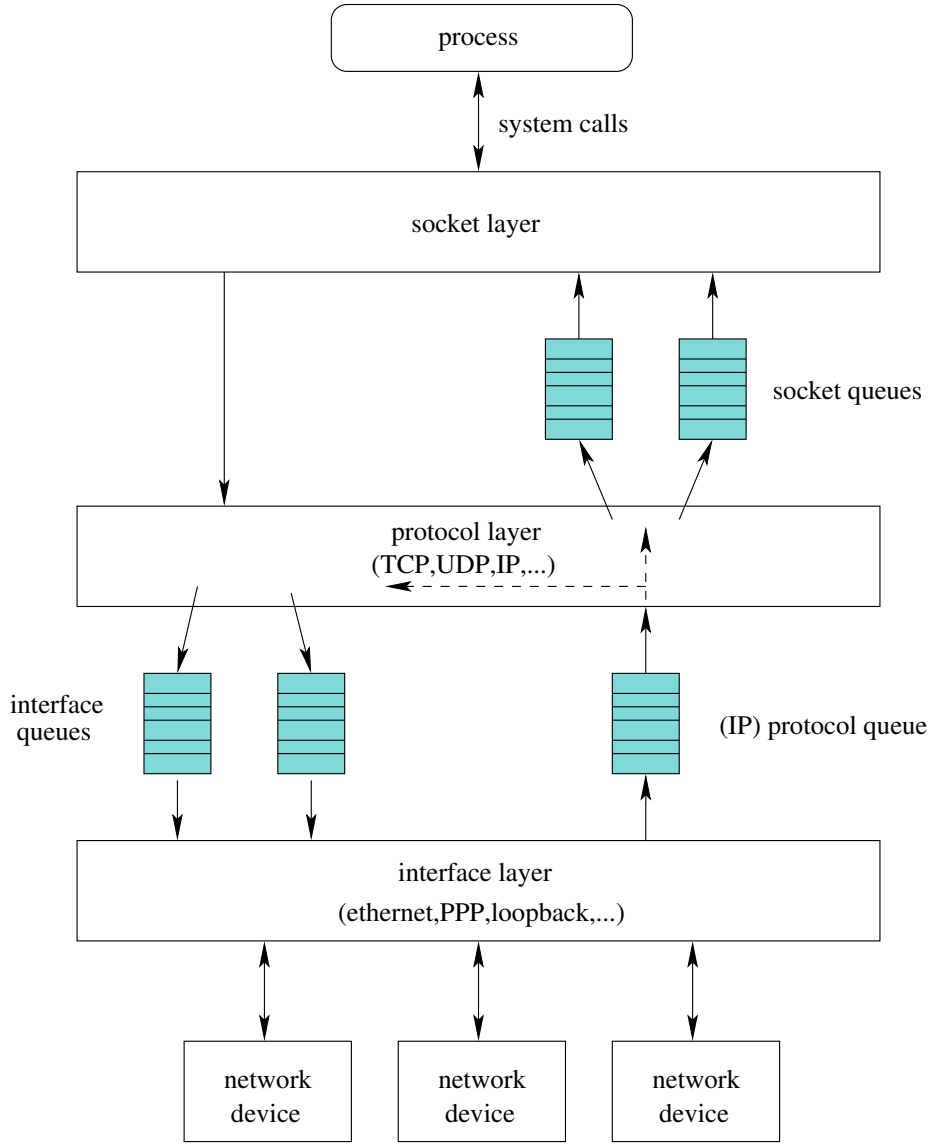
# BSD Unix Networking Layers